S35R5HD

3-1/2”x 3-1/2”x 5/8” RADIUS CORNERS HINGE
HEAVY DUTY/ STEEL

DELTANA

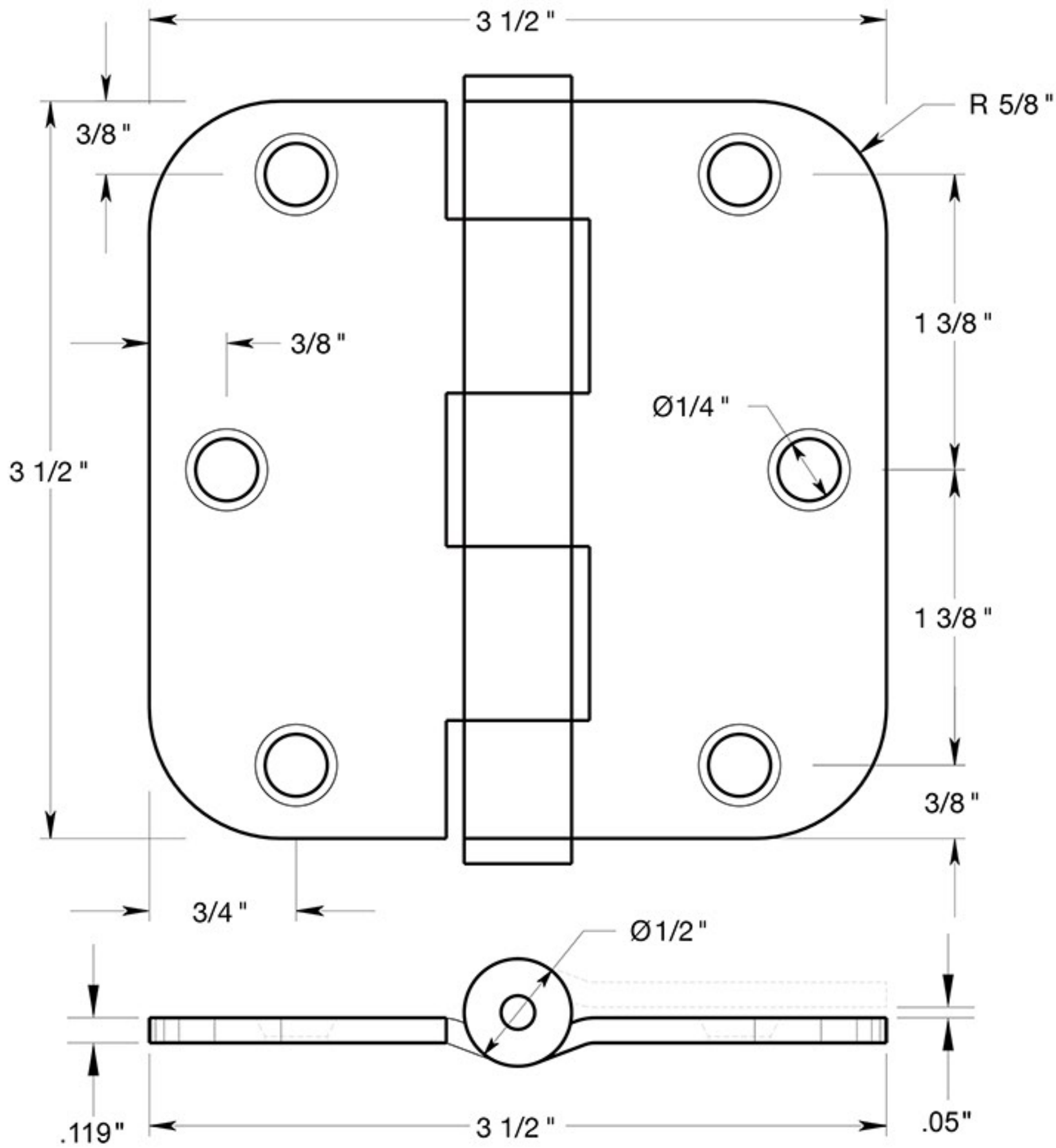

DRAWING NOT TO SCALE

NOTE: Deltana reserves the right to constantly improve its products and is not responsible for differences between the product in-hand and the specifications contained in this drawing. We do not recommend to pre-drill holes or pre-cut woods or metals based on the drawing information if the veracity of the specifications has not been proven by the live product.