KS2791,2,5,8ZLLS
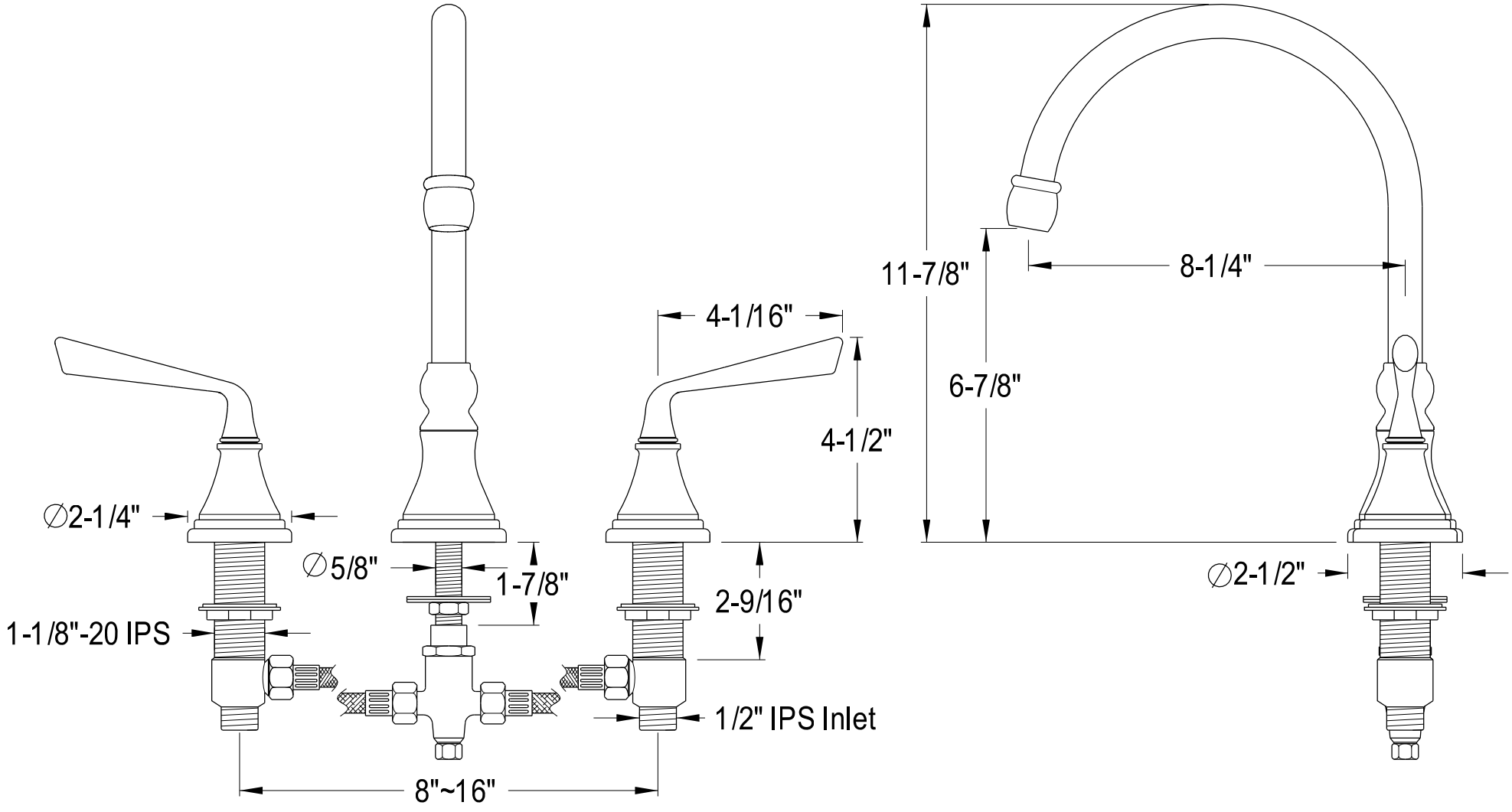
Widespread Kitchen Faucet