LS8410,1,3,4,5,8DL,DLAB
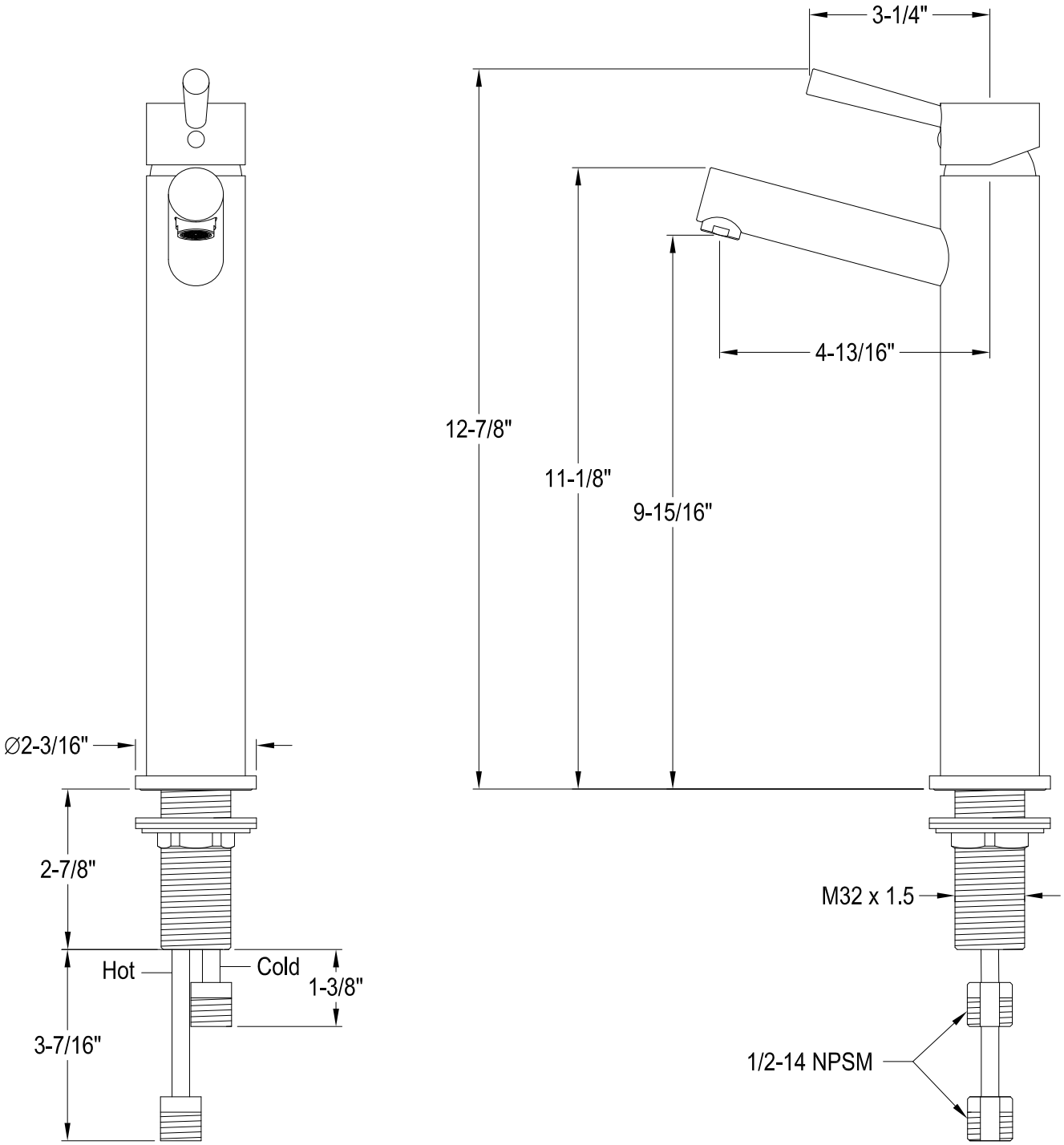
Single Handle Vessel Sink Faucet