KVPB36MOQ0,1,6,7
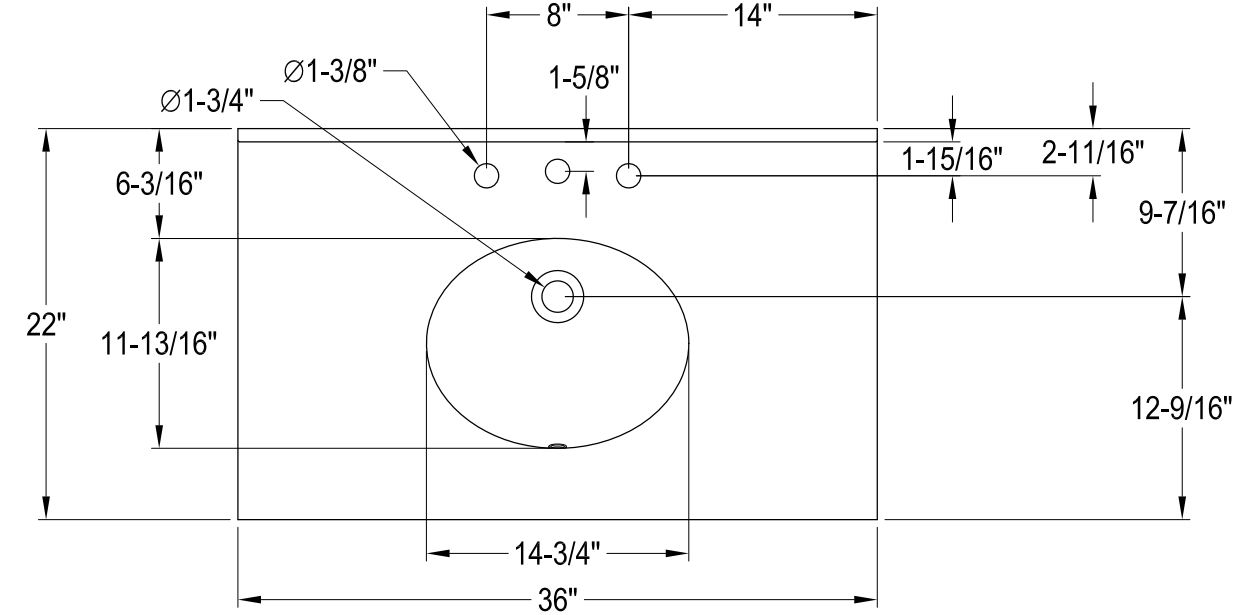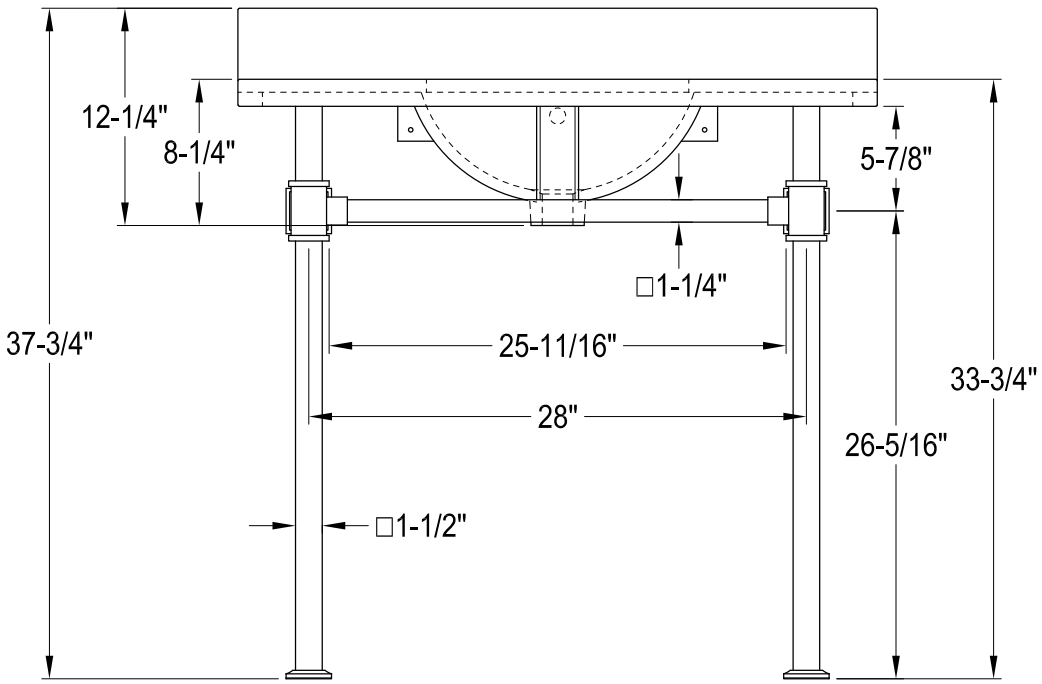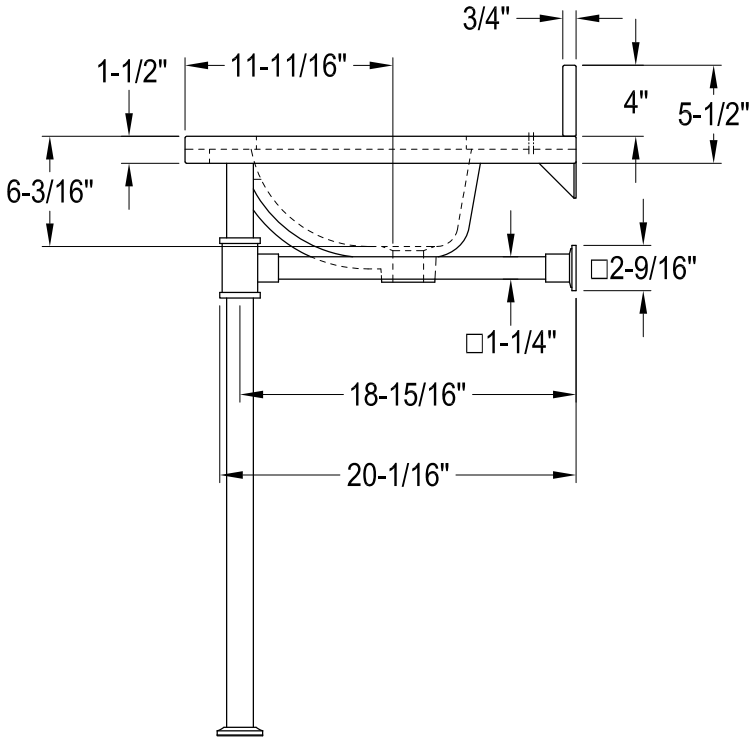
36" Carrara Marble Console Sink