KSX3520,1,2,3,5,6,7,8SG
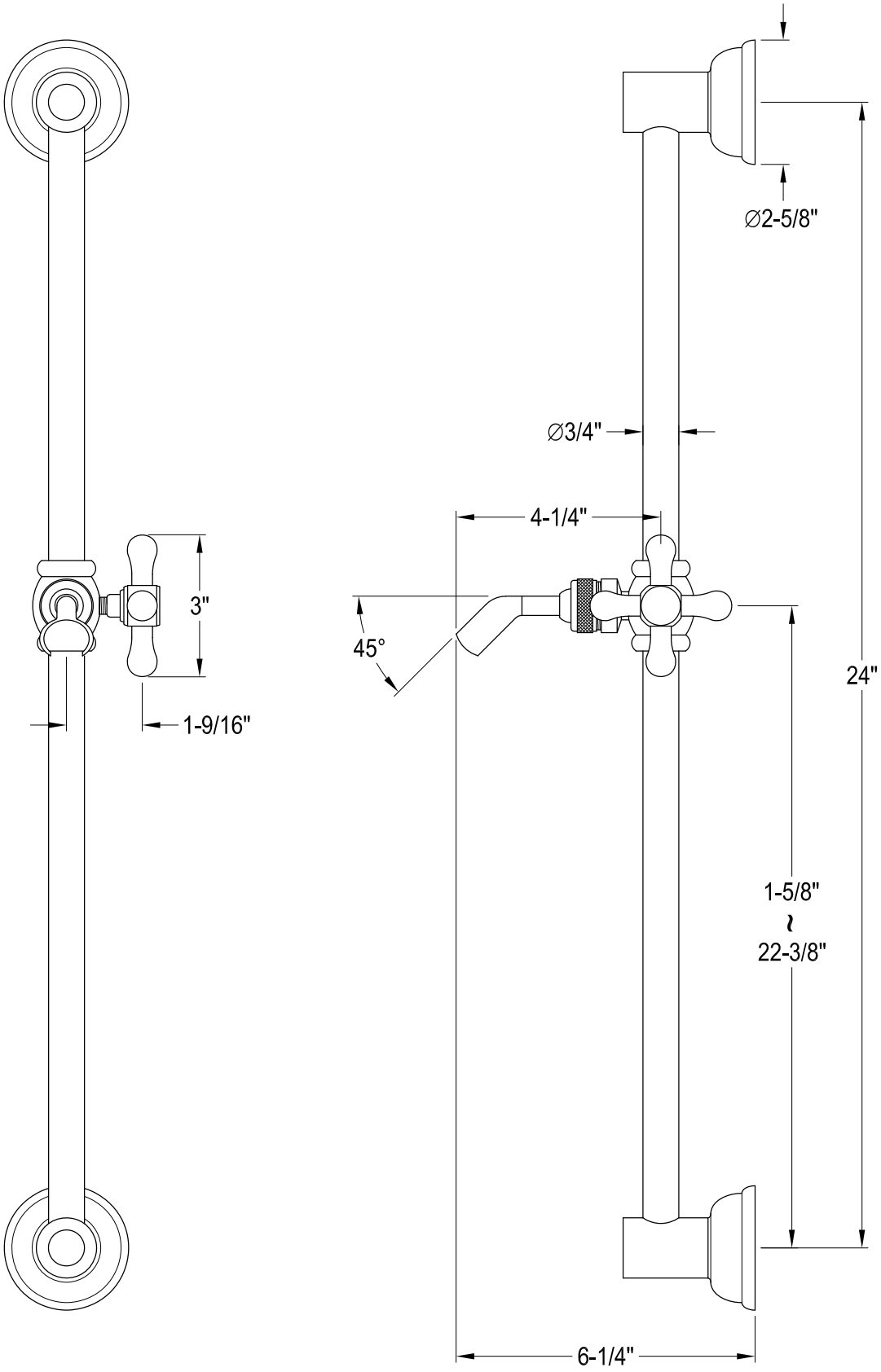
Shower Slide Bar