4580 W Roosevelt Rd Hillside, IL 60162 www.Lenovasinks.com Phone: 877-733-1098

SPECIFICATIONS MODEL SS-OT-D33

GENERAL
Fine quality sink formed of heavy duty 16 gauge, type 304 nickel bearing stainless steel.

DESIGN FEATURES
Bowl depth 10” with inside bowl dimensions 14-29/32”X17”, and over all 33”X22”.
Finish: Inside bowl surfaces polished to a uniform satin finish.
Underside: High density sound absorption pads covered with a thick rubberized insulation layer on all bottom surfaces.
Mounting Type: Undermount or Topmount
Other: Drain opening 3 ½”.

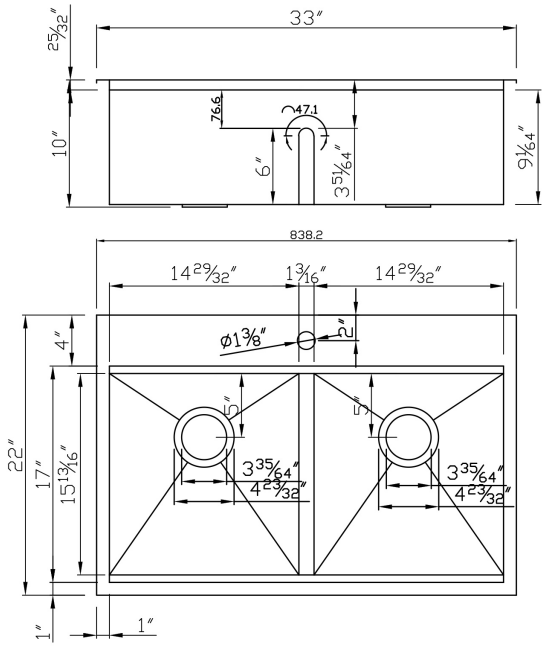

CUPC certified
Minimum cabinet size 33”
Product shall be specified as SS-OT-D33

OPTIONAL ACCESSORIES:
Sink Drain: A-SS-01, A-SS-02
Stainless Steel Colander: SS-AC-LE
Bamboo Cutting Board: A-CB-03
Stainless Steel Grids: GOTD33
Stainless Steel Rolling Grid: SS-AC-GR

Warranty:
Limited life time warranty against manufacturer defects and craftsmanship.