Streamline

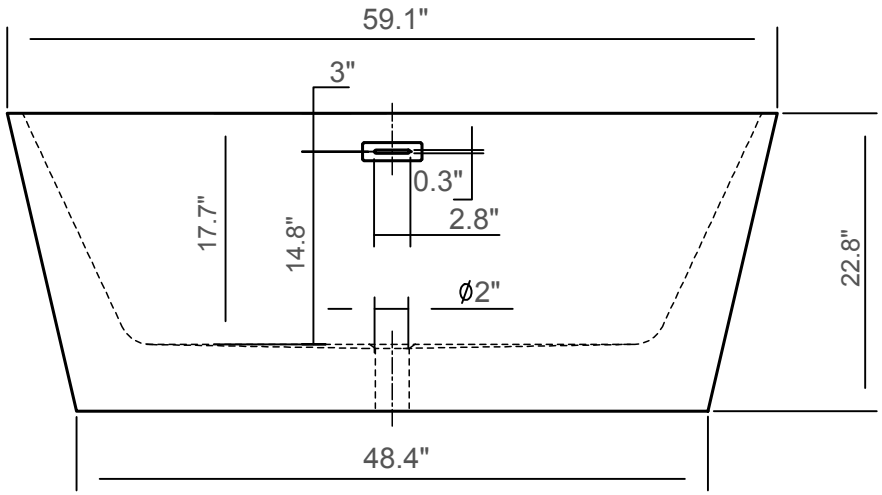
59.1"
3"
0.3"
2.8"
17.7"
14.8"
22.8"
ϕ2"
48.4"

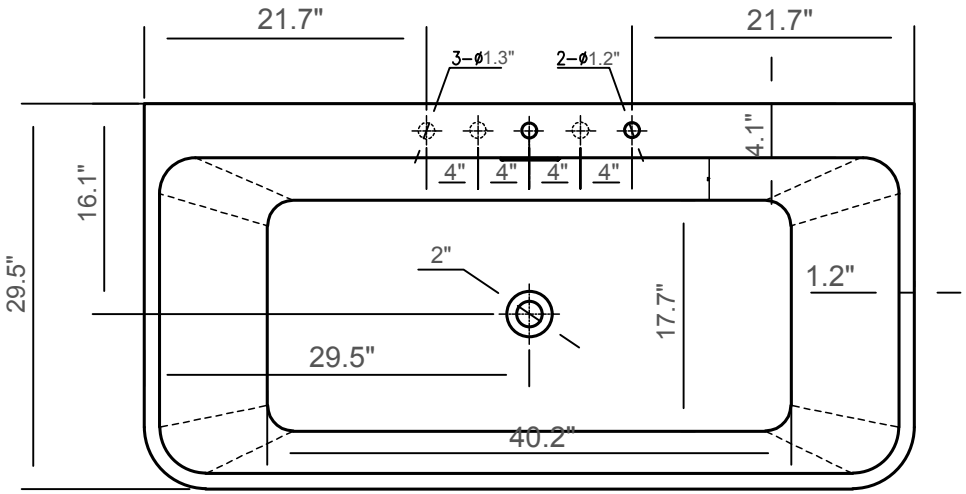
21.7"
21.7"
3-ϕ1.3"
2-ϕ1.2"
4.1"
4"
4"
4"
4"
16.1"
29.5"
2"
17.7"
1.2"
29.5"
40.2"